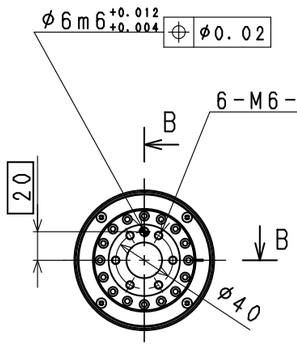

VIEW A

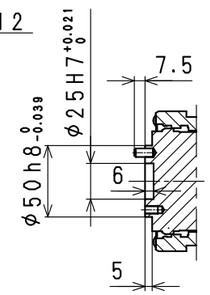

SECTION B-B

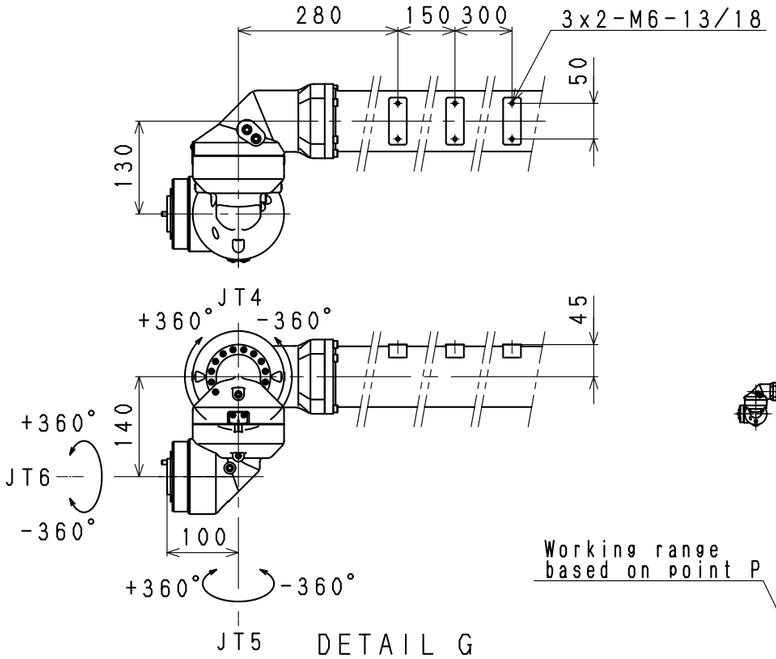

DETAIL G

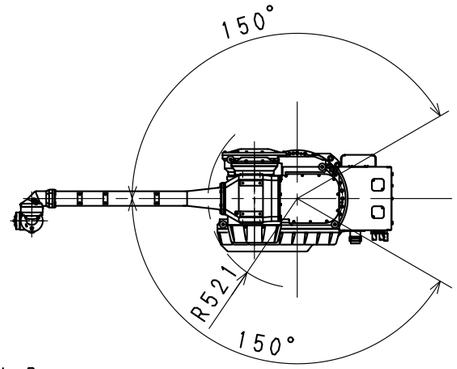

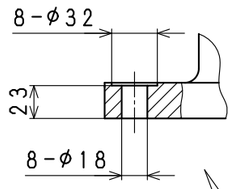

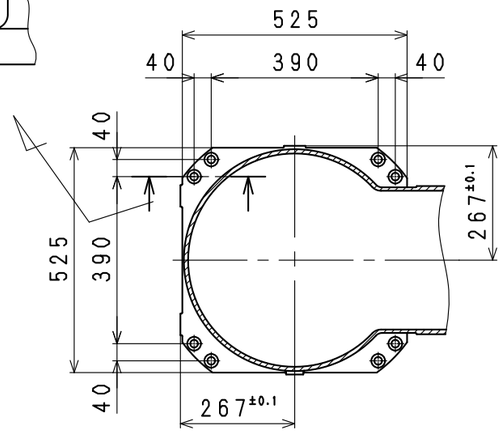

Base Installation Dimensions

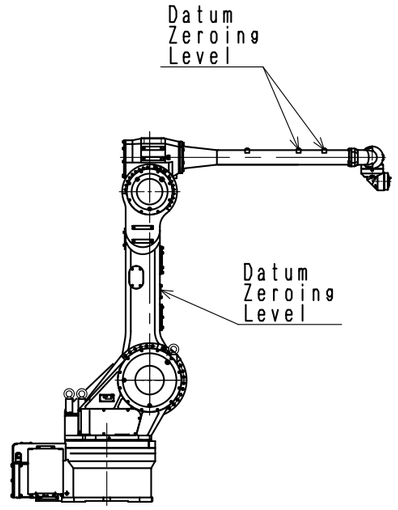

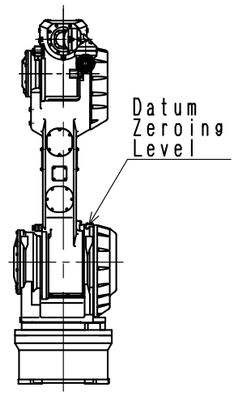

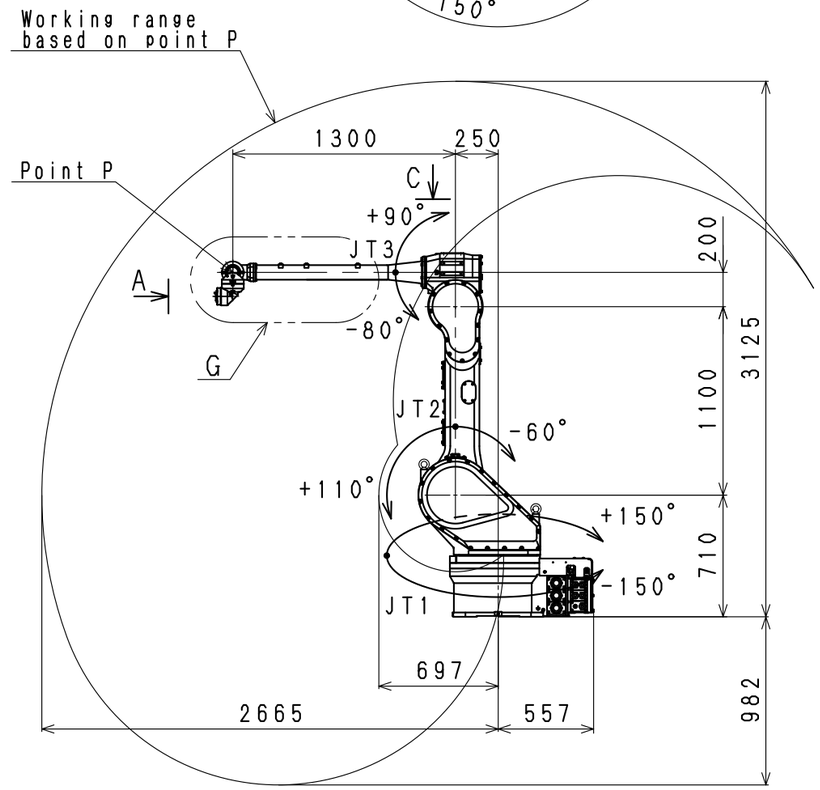

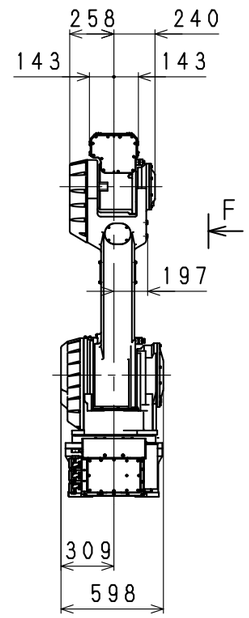

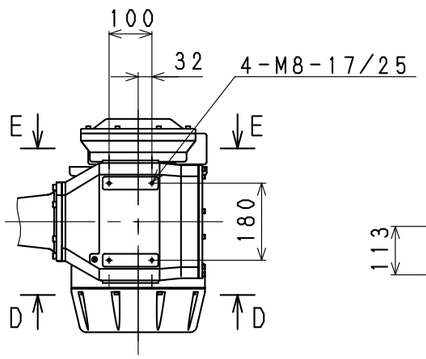

VIEW C

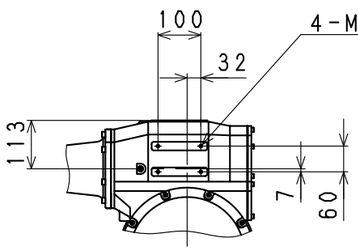

VIEW D-D

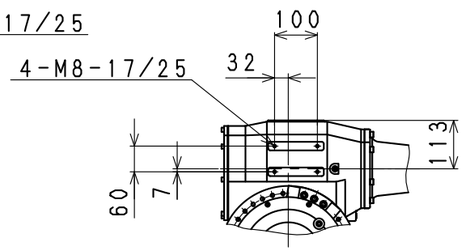

VIEW E-E

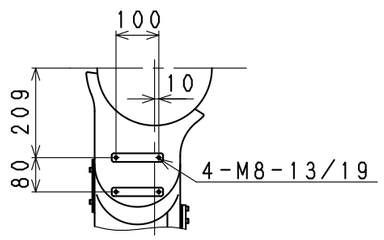

VIEW F

KF262
WORKING RANGE